NOTES

1. OVER VOLTAGE RANGE OF 4.5 TO 24 VDC AND TEMPERATURE RANGE OF -40°C TO +150°C
2. SWITCH IS OFF (RELEASED) WHEN VANE IS IN GAP
3. CHARACTERISTICS MEASURED WITH THE VANE AT NOMINAL DIMENSION AND A 20mA LOAD
4. A 0,79±0,01 THICK CRS (ANNEALED 1010-1018 OR LOWER CARBON) VANE OF SHOWN DIMENSIONS IS TO BE USED WHEN CHECKING MECHANICAL CHARACTERISTICS. VANE CENTER TO BE HELD 5,30±0,05 FROM RIVET CENTERLINE
5. Bo = (MECHANICAL CHARACTERISTICS CENTER REFERENCE POINT), DETERMINED BY THE EQUATION: (A+B+C+D)/4=Bo. OPERATE = TRAILING EDGE TRIGGER POINT. RELEASE = LEADING EDGE TRIGGER POINT. DIFFERENTIAL = OPERATE MINUS RELEASE (A - C)
6. ABSOLUTE MAXIMUM RATINGS ARE THE EXTREME LIMITS THE DEVICE WILL WITHSTAND WITHOUT PERMANENT DAMAGE TO THE DEVICE. HOWEVER, DEVICE OPERATION IS NOT GUARANTEED AS MAXIMUM LIMITS ARE APPROACHED
7. MAX RISE TIME IS BASED ON 4700 pF +20% -10% CAPACITOR FROM OUTPUT TO COMMON (GROUND)
8. THIS DIMENSION TO BE MEASURED FROM BASE OF IC TOWER TO MAGNET FACE. STEADY STATE DEFLECTION AT TOP OF IC TOWER MAY NOT EXCEED 0,10 ABSOLUTE, RELATIVE TO DATUM A
9. THIS DIMENSION TO BE MEASURED FROM BASE OF IC TOWER TO RIVET CENTERLINE
10. EPOXY IN THIS AREA MAX. 0,3 HEIGHT PERMISSIBLE
11. CATALOG LISTING AND DATE CODE MARKED THIS SURFACE
12. A POSITIVE DELTA OPERATE MEANS THE OPERATE POINT IS MOVING AWAY FROM Bo. A POSITIVE DELTA RELEASE MEANS THE RELEASE POINT IS MOVING TOWARD Bo. DELTAS ARE REFERENCED FROM CHARACTERISTIC MEASUREMENT AT 12 VDC AND 25°C

13- WIRES ARE 24 AWG CROSS-LINKED POLYETHYLENE

2AV54

ELECTRICAL CHARACTERISTICS (1)

	TYP 25°C	CURRENT SINK MAX	CURRENT SINK REMARKS
SUPPLY CURRENT	10 mA	22 mA	PLUS LOAD CURRENT
OUTPUT VOLTAGE (OPERATED) (ON)	0.2 VOLTS	0.4 VOLTS	20 mA MAX LOAD
OUTPUT LEAKAGE CURRENT (RELEASED) (OFF) (2)	0.2μ A	10μ A	OUTPUT TRANSISTOR LEAKAGE
OUTPUT SWITCHING TIME (7)			40 mA LOAD
RISE TIME (REL. POINT)	6.2μS	12μ S	10% TO 90%
FALL TIME (OPER. POINT)	0.2μS	1μ S	90% TO 10%#

ABSOLUTE MAXIMUM RATINGS (6)

SUPPLY VOLTAGE (Vs)	-40 TO +30
VOLTAGE EXTERNALLY APPLIED TO OUTPUT	+40 VDC MAX WITH SWITCH IN "OFF" CONDITION ONLY -0.8 VDC MIN WITH SWITCH IN "ON" OR "OFF" CONDITION
LOAD ON OUTPUT	40 mA 5 MIN, MAX
TEMPERATURE	-40°C TO +160°C 2 HR MAX
TRANSIENT SUPPLY VOLTAGE	+80V FOR 250 mSEC MAX
TRANSIENT SUPPLY CURRENT	-.5 A TO + .5 A FOR 15μ SEC MAX
TRANSIENT OUTPUT CURRENT	-.5 A TO + .5 A FOR 15μ SEC MAX

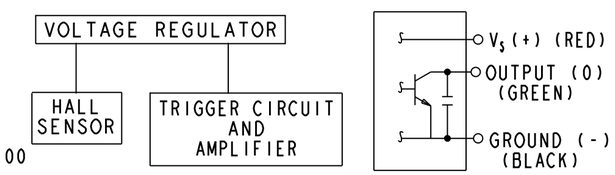

BLOCK DIAGRAM SHOWING CURRENT SINKING OUTPUT

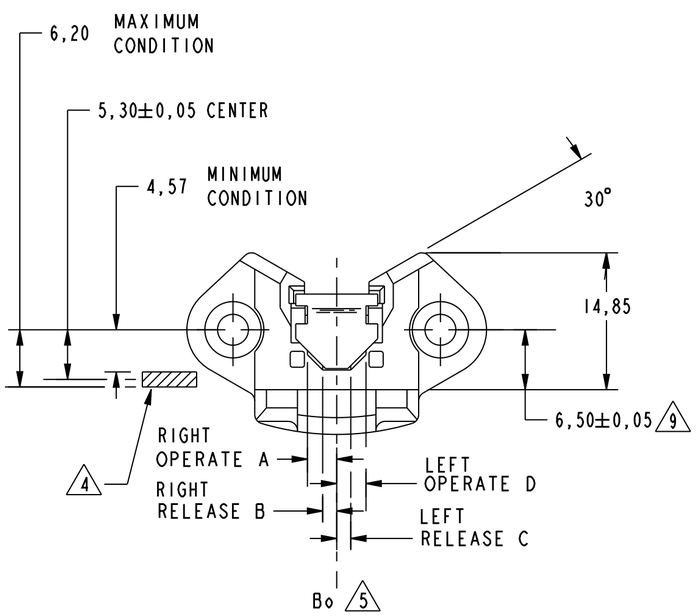

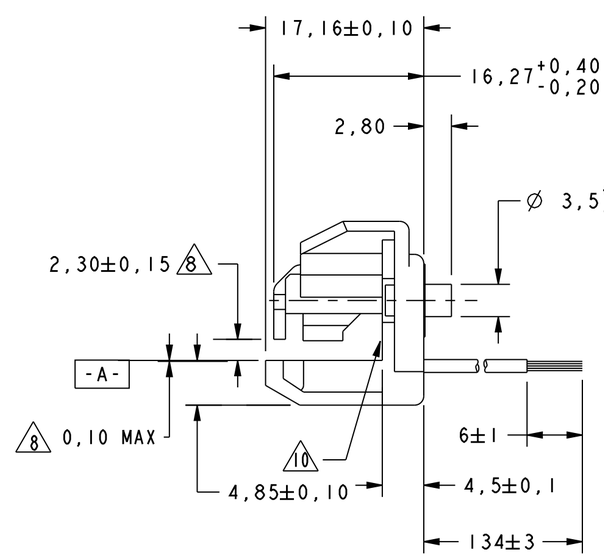

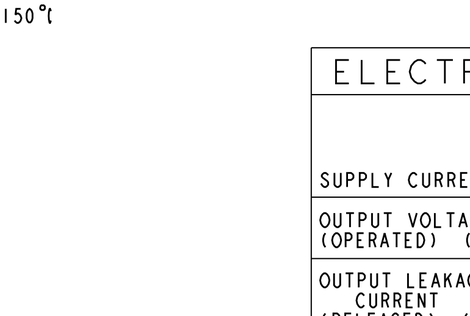

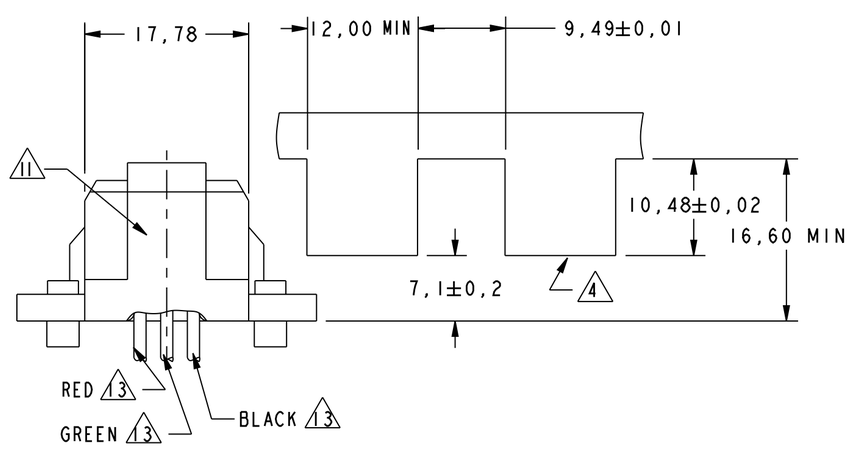

MECHANICAL CHARACTERISTICS (1)(3)(4)(12)

OPERATING RANGE	LEFT OR RIGHT OPERATE	LEFT OR RIGHT RELEASE	LEFT OR RIGHT DIFF.	DIFFERENTIAL L TO R, R TO L
12 VDC	1,19 ±0,30	-1,04 ±0,33	0,38 ±0,33	2,21 ±0,64
25°C 12V, 25°C TO 4.5V, -40°C	△ -0,03 ±0,25	△ 0,03 ±0,20		△ 0,03 ±0,25
12V, 25°C TO 24V, -40°C	△ 0,05 ±0,18	△ -0,03 ±0,15		△ -0,03 ±0,23
12V, 25°C TO 4.5V, 150°C	△ 0,03 ±0,46	△ -0,03 ±0,48		△ -0,03 ±0,53
12V, 25°C TO 24V, 150°C	△ 0,03 ±0,51	△ -0,03 ±0,51		△ -0,03 ±0,53

CAUTION ELECTROSTATIC SENSITIVE DEVICES DO NOT OPEN OR HANDLE EXCEPT AT A STATIC FREE WORKSTATION

ESD SENSITIVITY: CLASS 3

THIRD ANGLE PROJECTION

SCALE 2 : 1

DO NOT SCALE PRINT

TOLERANCES

APPLY TO DESIGN UNITS. CONVERSIONS ARE ONLY FOR REFERENCE. UNLESS NOTED, TOLERANCES ARE :

	DIM. mm	TOL mm/in	DIM. in	TOL mm/in
NO PLACES	X	1/.04	X.X	0.8/.03
ONE PLACE	X.X	0.4/.016	X.XX	0.38/.015
TWO PLACES	X.XX	0.15/.006	X.XXX	0.13/.005
THREE PLACES				
ANGLES				

DESIGN UNITS: SI METRIC ☒ US CUSTOMARY ☐

WEIGHT

THIS DRAWING COVERS A PROPRIETARY ITEM AND IS THE PROPERTY OF MICRO SWITCH, A DIVISION OF HONEYWELL. THIS DRAWING IS NOT TO BE COPIED OR USED WITHOUT THE APPROVAL OF MICRO SWITCH.

MICROSWITCH a Honeywell Division

FED. MFG. CODE 91929

SOLID STATE VANE SWITCH

CATALOG LISTING 2AV54

ANSI Y14.5M-1982 APPLIES

2AV54	X92982-AV																
	REPLACES																
	PAGE 1 OF 1																
	RELEASE NO. PR-18516																
DRAWING NUMBER																	
8																	
ISSUE																	
		CHECK															
REVISIONS																	
A	C095751																
	TSM 3 FEB 00																
B	0066220																
	PRS 11JUN10																
		11JUN10															
			RS														
				CHECK													
					3 FEB 00												
						SAV											
							CHECK										
								3 FEB 00									
									DRAWN								
										TSM							
											PTC/CAD	2D					